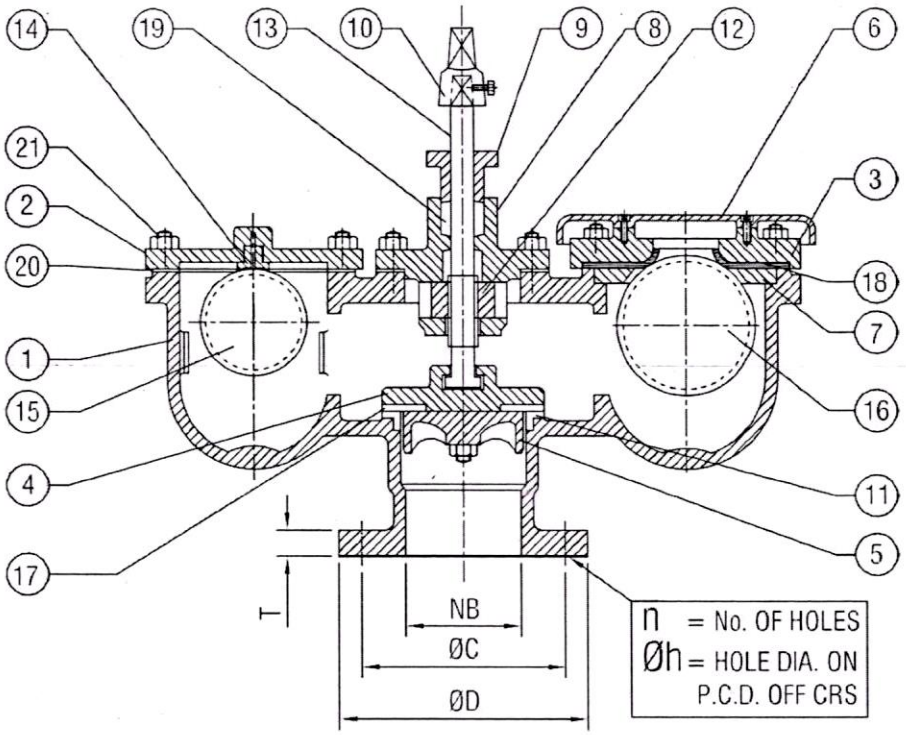

PN-1.6

6	-	200	340	24.5	295	8	23
5	-	150	285	23	240	8	23
4	-	100	220	22	180	8	19
3	-	80	200	21	160	4	19
2	-	50	165	18	125	4	18
1	-	40	150	16	110	4	18
-	Nos	NB	ØD	T	ØC	n	Øh
SL. No	QTY.	VALVE SIZE	FLANGE DIMENSIONS				

MATERIALS OF CONSTRUCTION

SL. No.	DESCRIPTION	MATERIAL	SPECIFICATION
1	BODY	CAST IRON	IS:210 Gr. FG-200
2	HIGH PRESSURE COVER		
3	LOW PRESSURE COVER		
4	VALVE		
5	VALVE HOLDER		
6	COWL		
7	JOINT SUPPORT RING		
8	COVER		
9	GLAND		
10	CAP		
11	SEAT RING	L.T. BRONZE	IS:318 Gr. LTB 2
12	SPINDLE NUT		
13	SPINDLE	STAINLESS STEEL	ASTM A276 TYPE-410
14	H.P. ORIFICE	L.T. BRONZE	IS:318 Gr. LTB 2
15	BALL FOR H.P. CHAMBER	SOFT RUBBER COATED SEASONED TIMBER	
16	BALL FOR L.P. CHAMBER	HARD VULCANITE COATED SEASONED TIMBER	
17	VALVE SEAT	RUBBER	NEOPRENE
18	L.P. SEAT RING	RUBBER	NITRILE RUBBER
19	PACKING	JUTE & HEMP	IS:5414
20	GASKET	RUBBER	IS:638 Type-B
21	BOLTS & NUTS	CARBON STEEL	IS:1367 Class-4.6 & 4.0

HYDROSTATIC TEST PRESSURE FOR PN-1.6

BODY TEST PRESSURE :- 24 Kg./Sq.Cm.(g) WITH WATER DURATION 5 MIN.
SEAT TEST PRESSURE :- 16 Kg./Sq.Cm.(g) WITH WATER DURATION 2 MIN.

NOTES

1. ALL DIMENSIONS ARE IN MM. UNLESS OTHERWISE STATED.
2. KINETIC AIR RELEASE VALVE GENERALLY CONFORMING TO IS:14845 (DS-1).
3. FLANGED ENDS SHALL BE FLAT FACED & DRILLED TO IS:1538 TABLE-4 & 6. FOR 40 & 50 NB AS PER IS:6392 TABLE-17
4. PAINTING:- ALL VALVES SHALL BE PAINTED WITH BLACK BITUMINOUS PAINT.
5. MARKING : BRAND NAME/SIZE/RATING/HEAT NO./SL. NO.

CLIENT'S REF.

PROJECT / SITE	---
PO. NO.	--
CONTRACTOR	-
PURCHASER	--

SUPER

2021	INITIAL	DATE
DRAWN	S.PAL	03.07.2025
CHECKED	S.DAS	03.07.2025
APPROVED	P.HAZRA	03.07.2025
	ENQ. No ENQ-309	SCALE : N.T.S.

TITLE:- CI FLNGE END DOUBLE ACTING AIR RELEASE VALVE WITH IN-BUILT ISOLATING VALVE (DS-1).

DRAWING No.: SVMC/AV/08/25-26 REV. 0

SUPER VALVE MFG CO. Howrah

REFERANCE DRAWING	REVISION				
	0	-	P.ROY	08.01.2021	ISSUED FOR APPROVAL
	REV	ZONE	APPVD BY	DATE	PARTICULARS